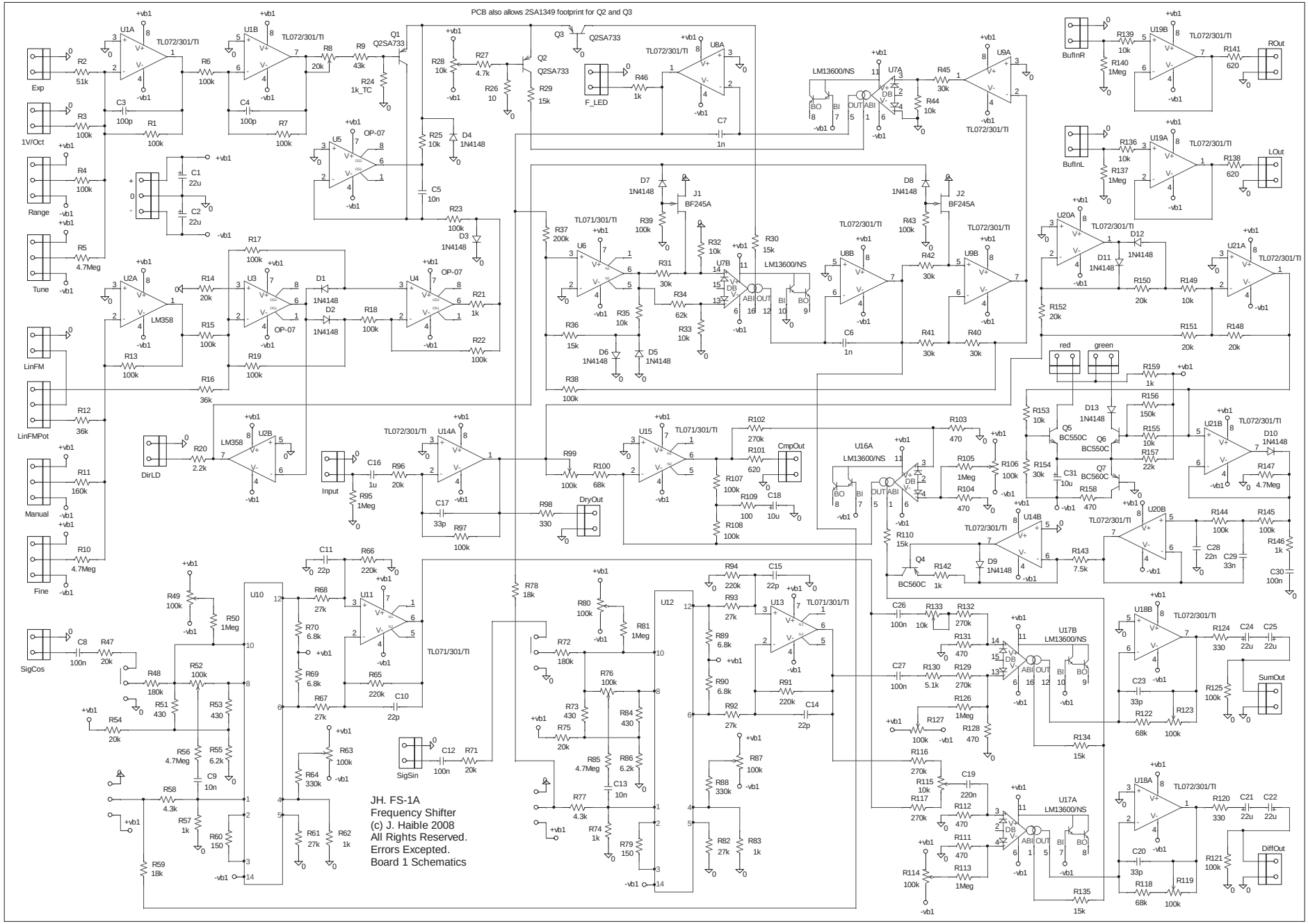
PCB also allows 2SA1349 footprint for Q2 and Q3
JH. FS-1A
Frequency Shifter
(c) J. Haible 2008
All Rights Reserved.
Errors Excepted.
Board 1 Schematics