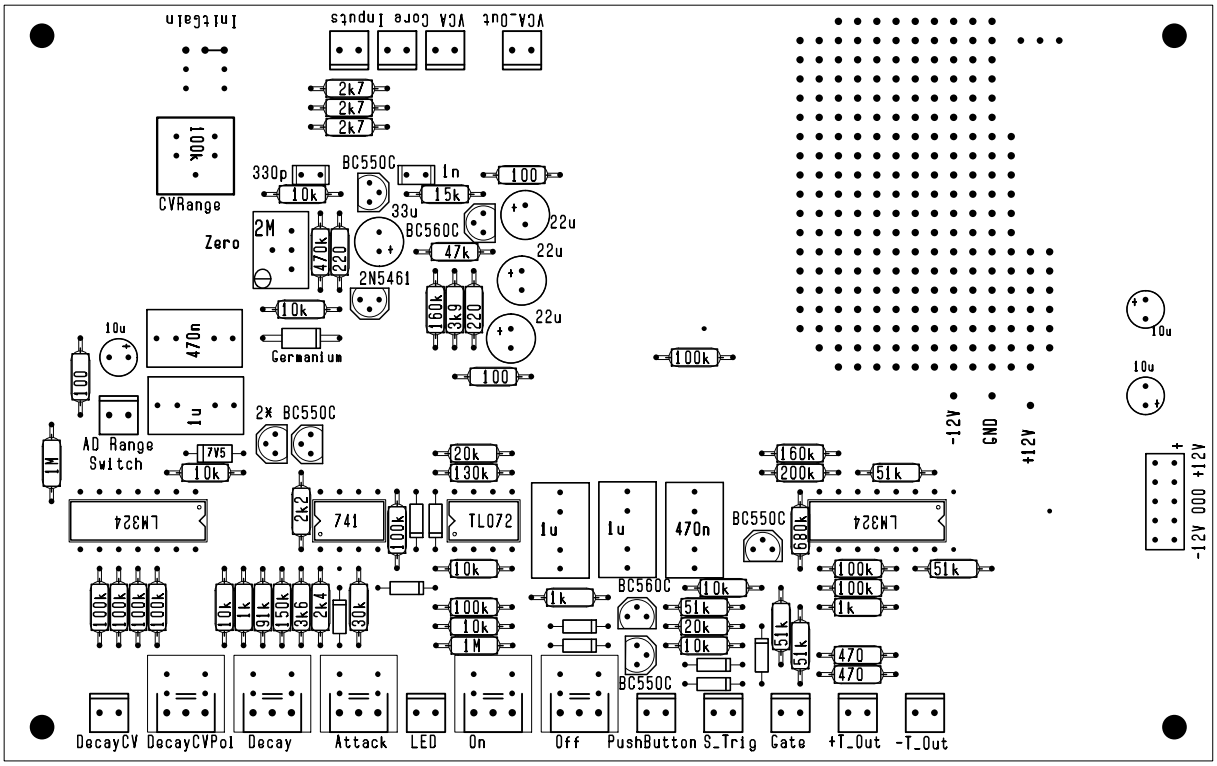
DecayCV
DecayCVPol
Decay
Attack
LED
On
Off
PushButton
S_Trig
Gate
+T_Out
-T_Out
LM324
741
TL072
LM324
LM324
2k2
100k
20k
130k
1u
1u
470n
160k
200k
51k
680k
BC550C
BC560C
BC550C
BC550C
BC560C
BC550C
2* BC550C
100k
100k
100k
100k
10k
1k
91k
150k
3k6
2k4
30k
100k
10k
1M
1k
10k
51k
20k
10k
51k
51k
470
470
100k
100k
1k
-12V
GND
+12V
-12V GND +12V
+
10u
10u
10u
470n
1u
100
1M
AD Range
Switch
5V1
10k
10k
2M
Zero
470k
220
10k
Germanium
100
CVRange
100k
330p
10k
BC550C
1n
15k
33u
BC560C
47k
2N5461
160k
3k9
220
100
22u
22u
22u
100
100k
VCA_Out
VCA Core Inputs
2k7
2k7
2k7
Initgain