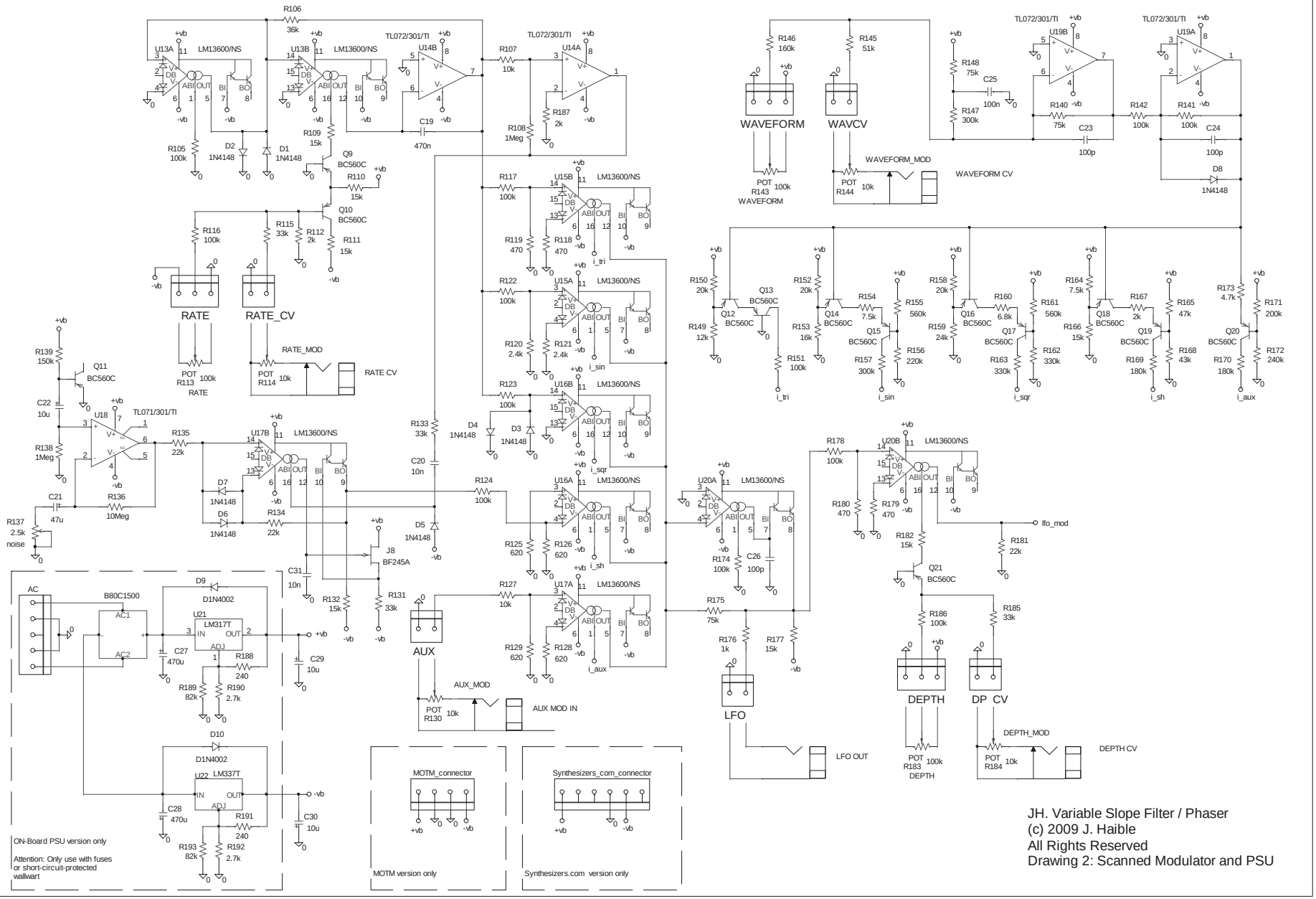
WAVEFORM
WAVCV
WAVEFORM_MOD
WAVEFORM CV
RATE
RATE_CV
RATE_MOD
RATE CV
AUX
AUX_MOD
AUX MOD IN
LFO
LFO OUT
DEPTH
DP CV
DEPTH_MOD
DEPTH CV
lfo_mod
i_tri
i_sin
i_sqr
i_sh
i_aux
noise
AC
B80C1500
LM317T
LM337T
ON-Board PSU version only
Attention: Only use with fuses or short-circuit-protected wallwart
MOTM_connector
MOTM version only
Synthesizers_com_connector
Synthesizers.com version only
JH. Variable Slope Filter / Phaser
(c) 2009 J. Haible
All Rights Reserved
Drawing 2: Scanned Modulator and PSU