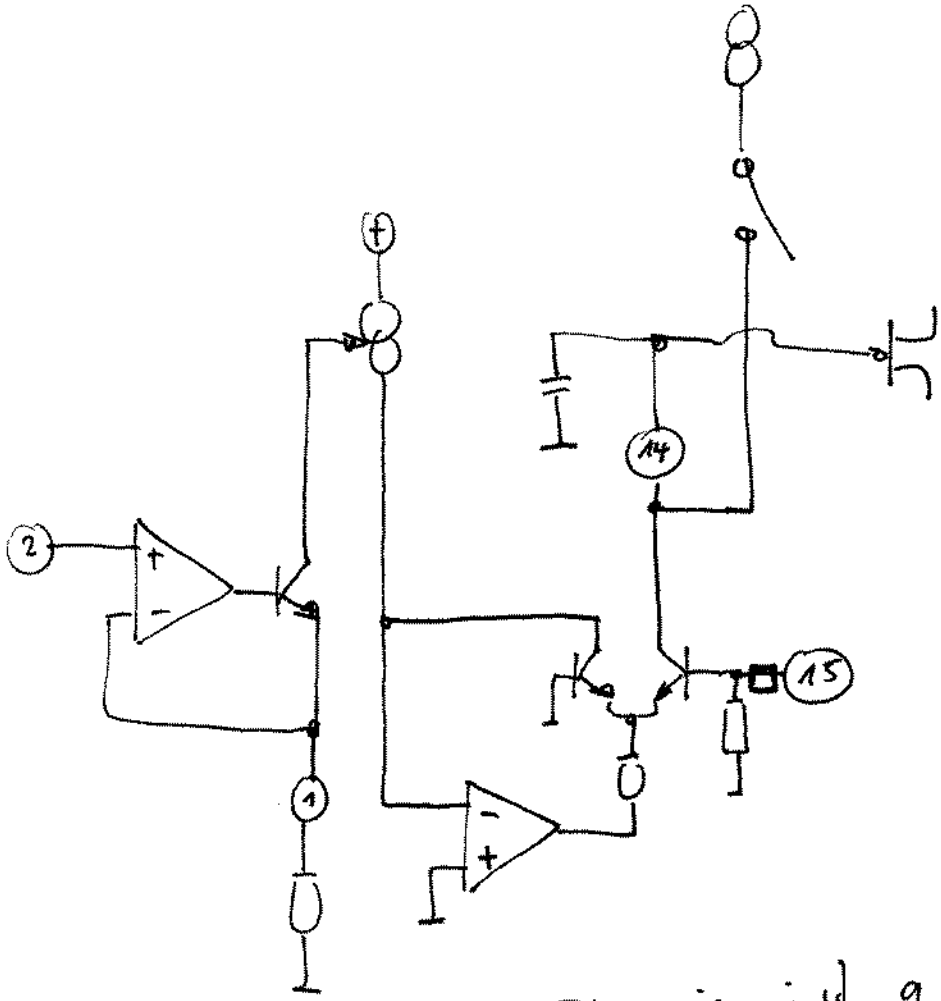

This is just a guess how the vibrato in the IG 00153 could be implemented.

Sept. 2004 J. Hecht