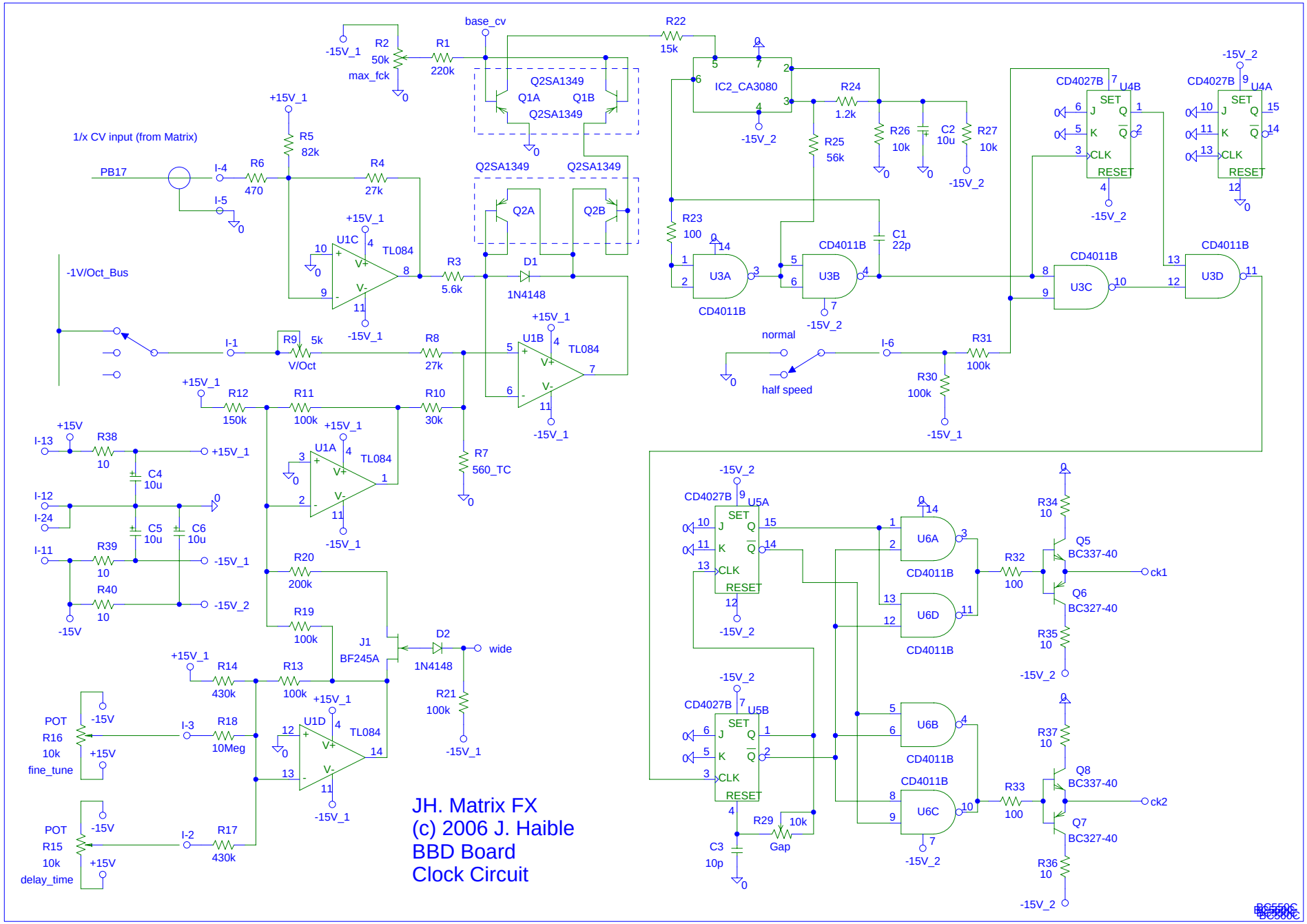
JH. Matrix FX
(c) 2006 J. Haible
BBD Board
Clock Circuit
1/x CV input (from Matrix)
PB17
-1V/Oct_Bus
base_cv
max_fck
fine_tune
delay_time
wide
ck1
ck2
normal
half speed
IC2_CA3080
Q2SA1349
TL084
CD4011B
CD4027B
BF245A
BC337-40
1N4148